HAYBUSTER

C10G, C10GA & C11 MODELS

PARTS CATALOG

SEPTEMBER, 1971

HAYBUSTER
Box 1008
Jamestown, North Dakota 58401

05-06

GENERAL WARRANTY
HAYBUSTER PRODUCTS

HAYBUSTER DISTRIBUTING INCORPORATED warrants new Haybuster equipment delivered to the original retail purchaser, by an authorized dealer to be free from defects in material and workmanship under recommended use and service, as stated in the owners manual, for one year from date of purchase.

Haybuster Distributing's obligation under this warranty is limited to the conditions on the warranty card for that particular product, and then only if the warranty registration card is filled in and returned within thirty days of the purchase date to Haybuster Distributing, Box 1008 Jamestown, North Dakota 58401.

Except as set forth above, Haybuster Distributing Inc. shall not be liable for injuries or damages of any kind or nature, to person or property. This warranty does not extend to loss of crops, loss because of delay, or loss incurred for labor, supplies, substitute machinery, rental or any other reason.

Haybuster Distributing Inc. reserves the right to make improvements in design or changes in specifications at any time, without incurring any obligation to owners of units previously sold.

HAYBUSTER TUB GRINDERS GENERAL INFORMATION

THE FOLLOWING INFORMATION APPLIES TO EITHER THE C-11 COMMERCIAL MODEL OR THE C10G and C10GA STOCKMANS MODEL HAYBUSTER.

HAMMERS:

For top performance it is very important to keep sharp hammers in the Haybuster, especially in tough conditions and with grass hay. The hammers have four cutting edges and may be easily turned when they become worn. Hammers are removed from inside the tub. Loosen the two $\frac{1}{2}$" locking bolts that hold the 3/16" plate on the front of the cylinder. Rotating this plate will expose aligning holes in front $\frac{1}{2}$" plate and allow hammer pins to be drawn out forward. Note: Check hammer location first.

SCREENS:

There are two screens beneath the cylinder of the Haybuster. This allows two different size perforations to be used at once. By changing perforation size the desired length cut may be made. Normally a 1" and 2" screen is supplied with the machine. The 1" screen is usually installed in the entry side of the cylinder. (left side when viewed from the front) By reversing the screens, a coarser cut can be made. Screens are also available with $\frac{1}{4}$", 3/8", $\frac{1}{2}$", 5/8", 3/4", and 3" perforations. When screens become worn or rounded excessively, they should be replaced. Worn screens and worn hammers cut down grinding capacity and waste power.

FEEDER TUB SPEED:

The feeder tub carries hay across the hammers and tub speed determines the rate of grinding. The tub speed must be set to hay conditions and available H.P. of the power unit. If clutch is operating quite often the tub speed is too fast.

CENTRIFUGAL CLUTCH:

As the cylinder speed gets up to 1700 RPM, the clutch will engage and start the tub turning. The cylinder should run at least 1800 RPM to insure that the clutch is pulled in solid and is not slipping. Excessive clutch slipping will overheat the linings and cause them to glaze. If a slug of hay pulls the tractor RPM down, the clutch will release and the tub will stop.
If the clutch does not seem to be operating properly, first check the cylinder RPM and make sure it is running at least 1800 RPM. If RPM is correct, the springs inside the clutch may have to be reset. At the rear side of the clutch are two 3/8" accentric bolts which anchor the clutch springs. Tightning the springs raises the pull in and drop out RPM. Loosening the spring has the opposite effect. If they are too loose tractor RPM will drop to low before the tub stops.

Caution: Adjustment of accentric bolts at rear of clutch is quite critical. About 1/8 turn will change pull in and drop out speed 200 RPM.

If it is necessary to clean the linings or inspect the clutch springs, remove the inside lock ring on the pulley end of the clutch and pull the drum and pulleys off.

CYLINDER:

Because the Haybuster cylinder operates at a high RPM, it is carefully test run before being installed. If hammers become worn at a different rate a slight vibration may be felt. This is acceptable. Vibration of a higher magnitude indicates that hammers may be broken and should be relocated or replaced.

TUB SPEED:

Tub speed is infinitly variable from 3/4 to 10 turns per minute. Two pulley changes are used on the gear box plus a variable drive assembly. A 16 to 1 reduction gear box is supplied with the mill to drive the tub through a 14 tooth cast sprocket. The tub is run at a slower speed when grinding bales and faster when grinding loose hay.

VARIABLE DRIVE:

Center to center distances on variable drive shafts is factory set at 17 5/8". This should not be altered as it will decrease belt life. Do not operate variable to its extreme limits as this places an overload on the thrust bearing. Two grease zerks on the variable should be serviced daily.

FEEDING THE TUB:

Wires must be removed from wire tie bales. String does not have to be removed from string tie bales, but smoother feeding and grinding will result if the strings are cut before the bales are dropped into the tub. A grapple fork works best for feeding loose hay. The hay should be pulled apart slightly before being dropped into the tub. If large amounts of hay hang over the edge of the tub it will not feed down properly. The tub must turn faster to feed loose hay down into the cylinder. Rocks are normally found in loose hay stacks that have been bucked. When a rock is heard in the tub, stop the tub and cylinder and remove the rock. It is also possible for a piece of steel to become wedged in one of the screens and be battered by the hammers.

MAINTENANCE:

Cylinder drive belts must be kept drum tight. To tighten, either remove shims in lower shaft or tighten idler. Check all pulleys and sprockets daily for tightness and alignment. Pressure roller on left side of top platform must take the forward pressure of the tub

LUBRICATION:

Tub support rollers should be greased daily.
Grease front and rear cylinder bearings sparingly every 10 hours of operation.
Grease variable drive bushings daily.
All universal joints should be serviced every 10 hours of operation.
Gear boxes should be serviced with 90 grease and STP.

C10G or C10GA Stockmen's Model

The 10 foot tub mill can be supplied with a 20 foot belt discharge conveyor (C10G) or with a 16 foot discharge auger (C10GA).

Either machine can be equipped for 1000 or 540 R.P.M. Power take off and the power take off speed may be changed at a later date if desired.

This grinder is furnished with a grain grinding compartment where grain may be ground through finer screens and mixed with the ground hay. The equipment needed to feed the grain into the grinder is offered as an option and may be added in the field.

Several kits shown elsewhere in this manual are available to grind ear or shelled corn or small grains through the hay grinding compartment.

C11 Commercial Grinder

The C11 is built for 1000 RPM power take off speed only. On special order it is available to be powered with an electric motor or a diesel power unit.

Cylinder belts must be kept drum tight. Remove shims from below the bearings to tighten belts.

DISCHARGE CONVEYOR

The conveyor is 22 feet long. When folding into transport position, rod must be installed across lower section to prevent belt from dragging on ground. The winch handle must be safety wired during transport. Upper bearings are adjustable to tension belt and one lower bearing is adjustable to center belt in the conveyor frame.

PRESSURE ROLLER

This roller is located on the left side of the upper platform. It should take the forward pressure of the tub while grinding. It also guides the tub chain on the tub knobs.

CORN AND GRAIN GRINDING

Kits are availble for the C11 grinder to dump ear corn into the tub or small grains into a hopper for high capacity grinding.

HAYBUSTER C10G & C10GA STOCKMEN'S MODEL

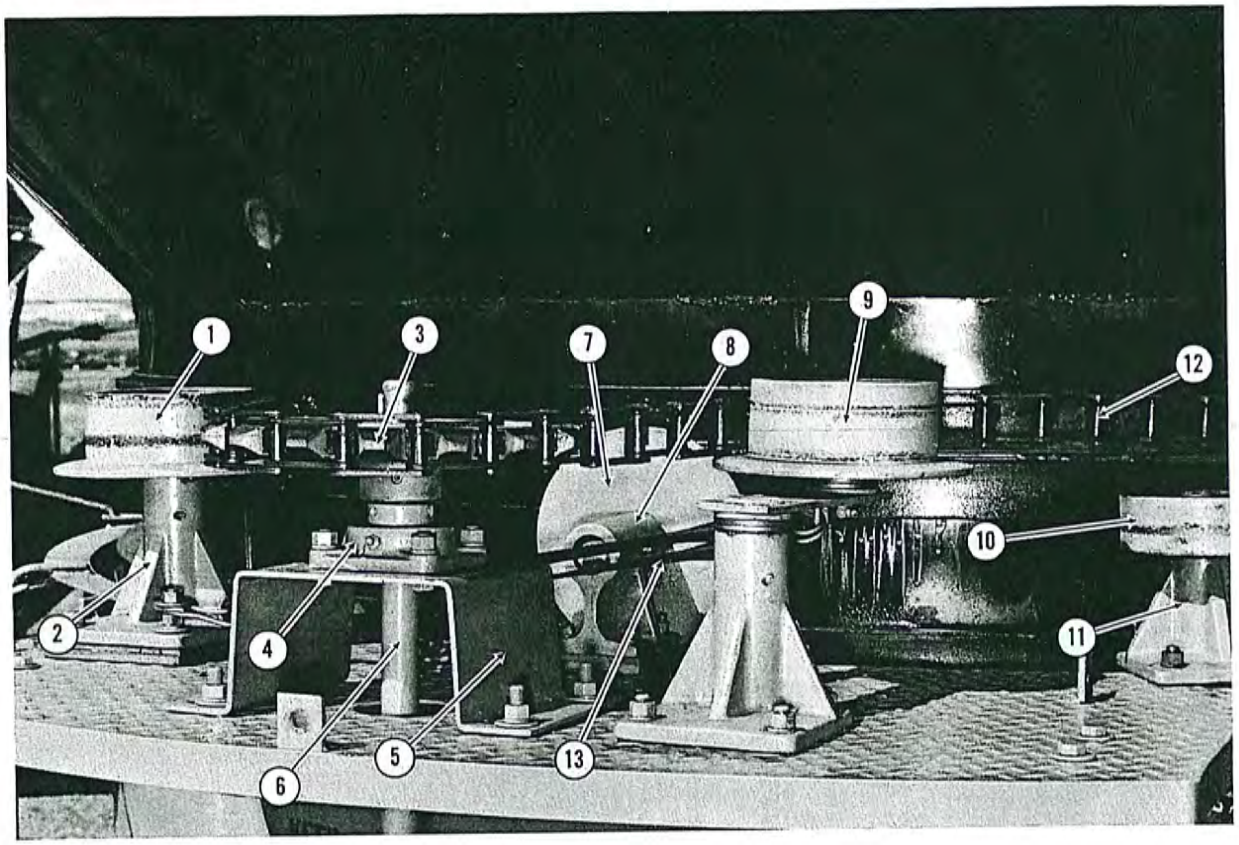

	Description	Part No.
1	1- #6 chain tightener roller	20-6S
2	2- #44 pedestals.	20-44
3	1- Cast sprocket	10-6700-14-114
	1- Cast sprocket	10-6700-16-114
4	1-Flange bearing	50-F4-114
5	1- Top hat.	J-145
6	1- Shaft, Gear box	S-20-114-SP-X4
7	4- #2 tub roller	20-2S
8	4- #3 Casting	20-3
9	1- #6 Chain tightener roller.	20-6
10	1- #5 pressure roller	20-5S
11	1- #4 pedestal	20-4
12	28' chain (6700H)	11-6700
	Connecting Link	11-6700CL
	Offset Link	11-6700OL
13	Spring Chain Tightener	J-160

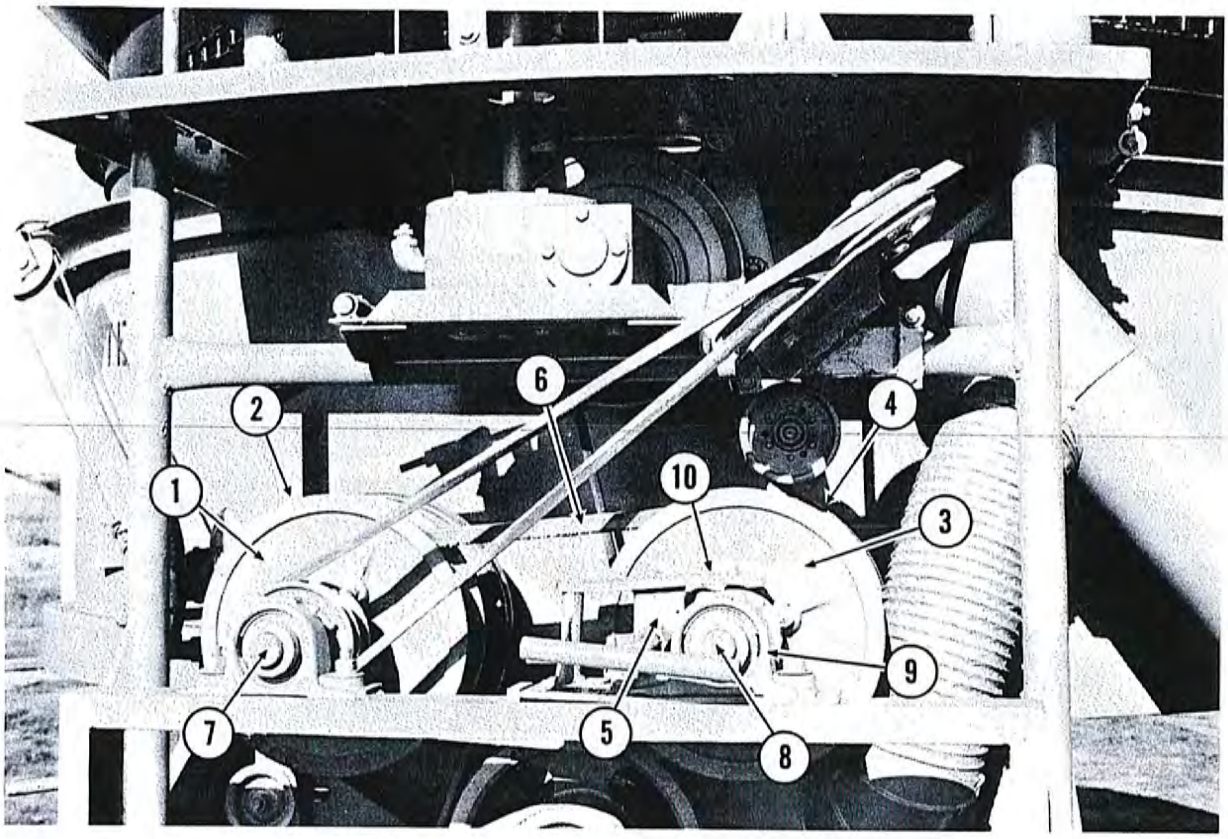

	Description	Part No.
1	1- Front half spring loaded variable plate-stationary . .	80-RV-3106
2	1- Rear half, movable.	80-RV-3108
3	1- Front half, bearing loaded, movable plate	80-D-210
4	1- Rear half, stationary plate	80-D-211
5	1- Variable adjustment assembly	80-VA-213
6	1- Variable belt.	40-VS-31
7	1- Right variable shaft	S-20.5-114-SP-X3
8	1- Left variable shaft.	S-20.5-114-SP-X2
9	4- Pillow block bearings, 1 1/4" bore	50-PB-114
10	1- Variable thrust bearing	80-911OPP

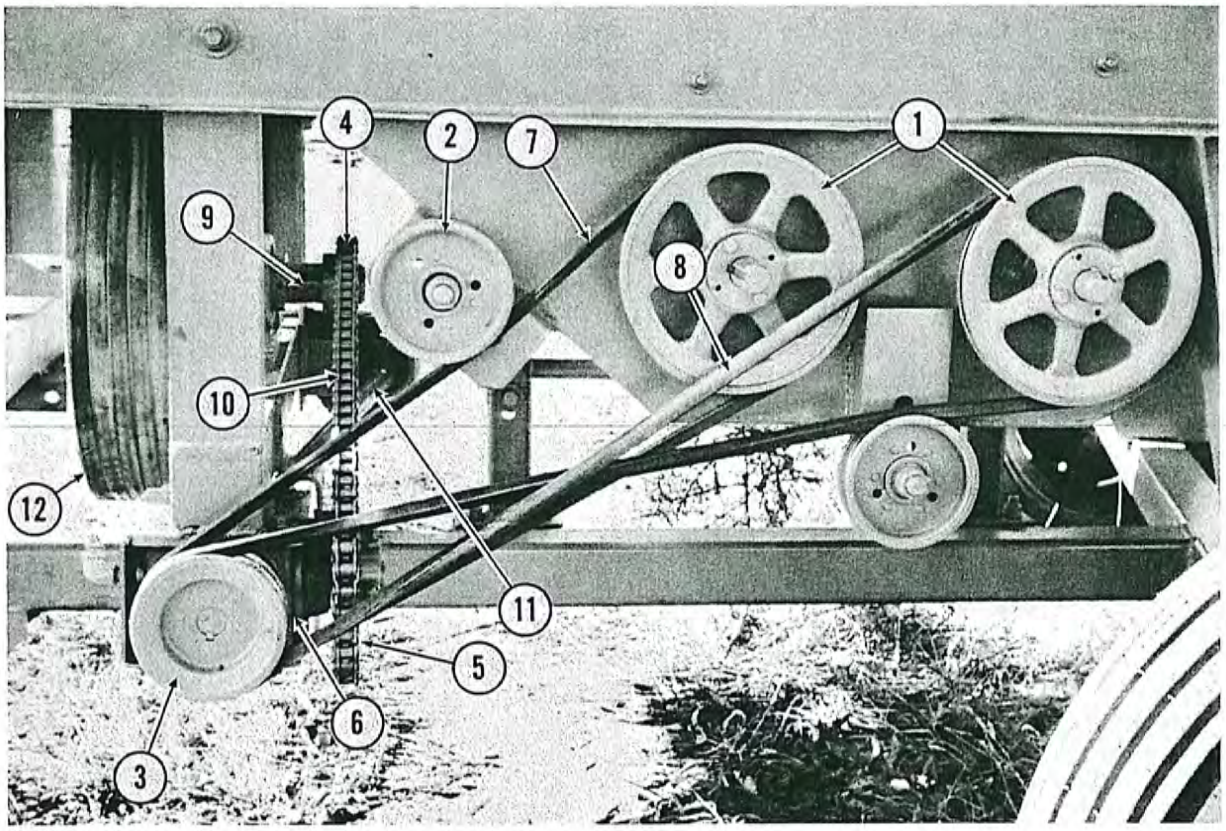

	Description	Part No.
1	2- 8 1/4" O.D. Cast Iron Pulley	35-8.25-B-100
2	2- 4" Flat idler.	30-4FI-58
3	1- 5" O.D. Cast Iron Pulley.	35-5-2B-100
4	1- Drive shaft sprocket- 540 RPM	10-60-20-134
	1- Drive shaft sprocket- 1000 RPM	10-60-15-134
5	1- Gear Box Sprocket- 1000 RPM.	10-60-22-100
	1- Gear Box Sprocket- 540 RPM	10-60-24-100
6	1- Gear Box (1 to 1 ratio)	80-GB-215-1-1
7	1- B60 belt	40-B-60
8	1- B81 belt	40-B-81
9	1- Shaft, PTO input	S-22.5-134-X1
10	1- Chain, input to gear box	11-60-69-OL-CL
11	1- Shaft, discharge auger - gear box.	S-25-100-X7
12	1- 18.4" Cast pulley, 6B groove	35-18.4-6B-134

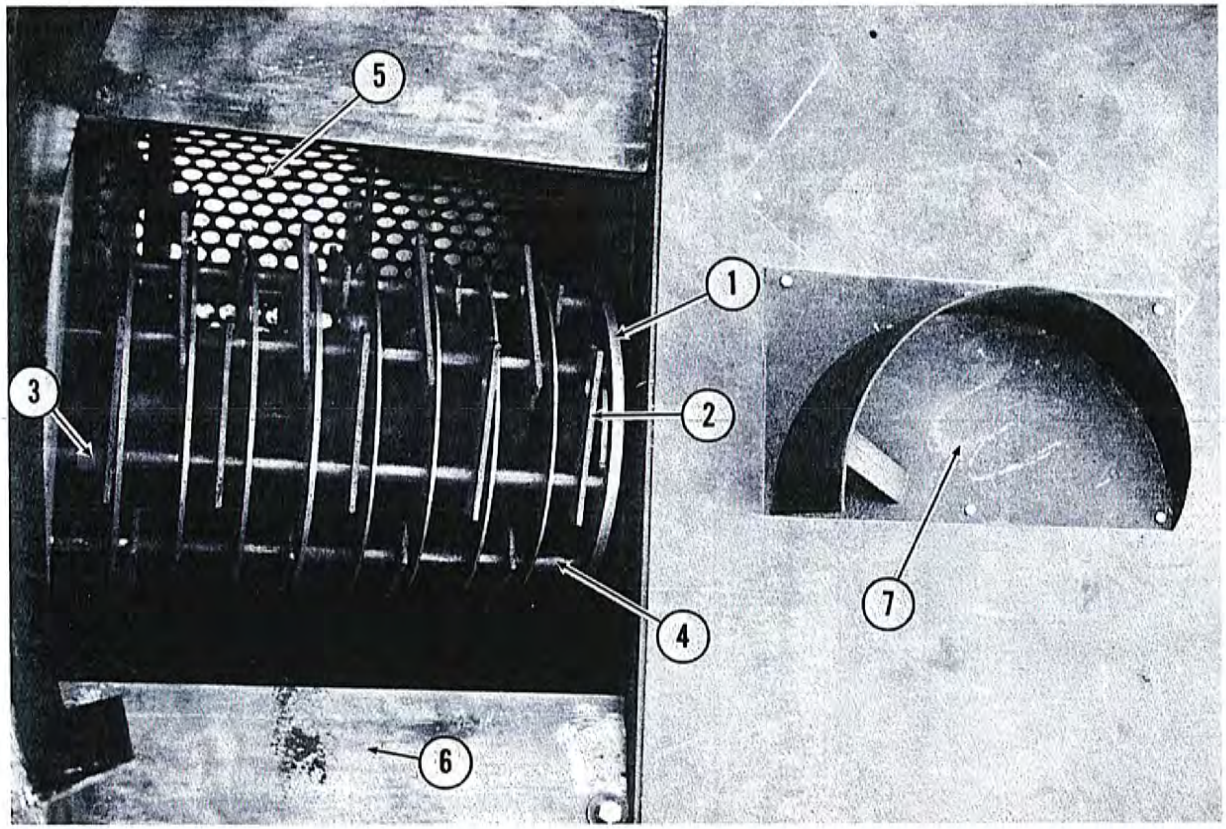

	Description	Part No.
1	1- 34" cylinder	J-140
2	36- Hammers	J-200
3	4- Hammer spacers (next to divider plate only)	J-202
4	8- Hammer Rods	J-201
5	2- Screens (2 each machine, available in 1/4", 3/8", 1/2", 5/8", 3/4", 1", 2", 3")	J-125
6	1- Screen hold down plate	J-203
7	1- Half Moon Cone (Shown in bale grinding position, move to other set of holes for loose Hay.)	J-150

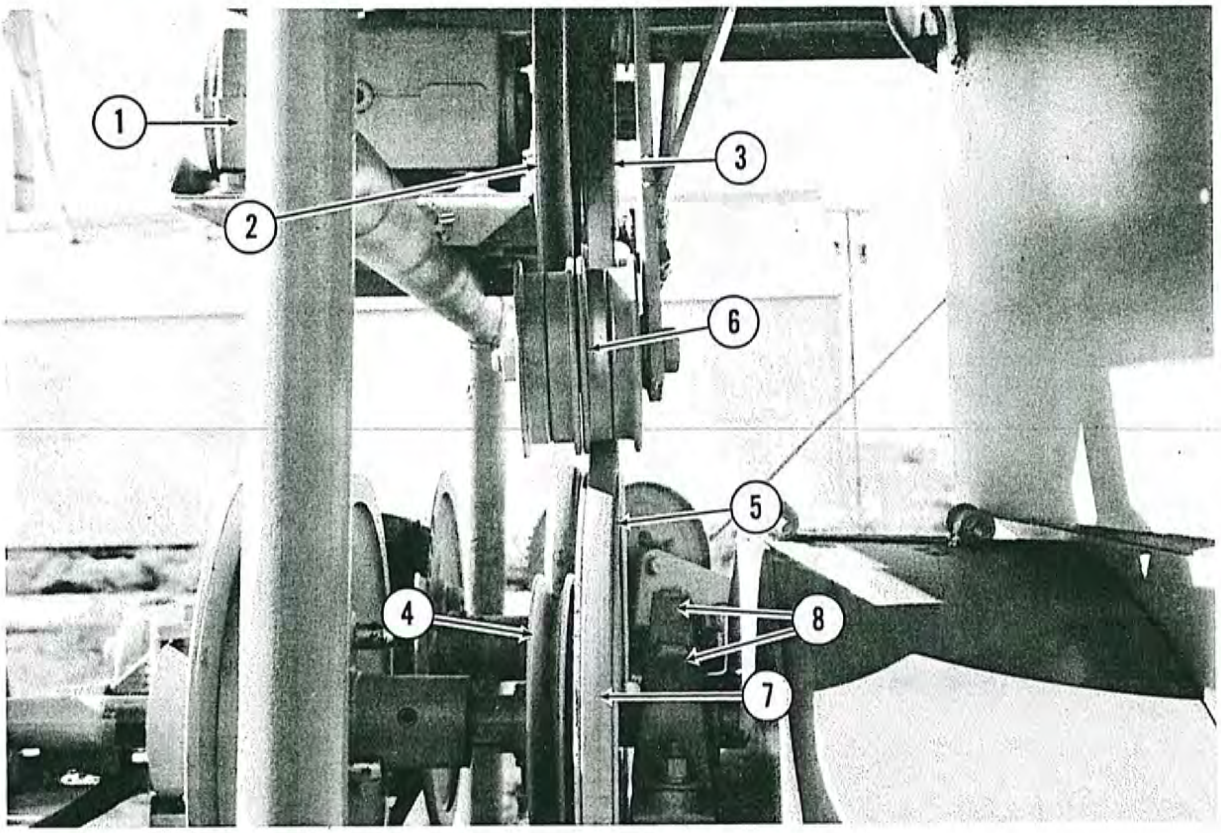

	Description	Part No.
1	1- Gear Box, 16 to 1 ratio	80-GB-W50B-16-1
2	1- 12" Steel Pulley	30-12B-100
3	1- 7" Steel Pulley	30-7B-100
4	1- 7" Steel Pulley	30-7B-114
5	1- 12" Steel Pulley	30-12B-114
6	2- 4" Flat idlers	30-4FI-58
7	1- B62 belt	40-B-62
8	4- Pillow block bearings	50-PB-114

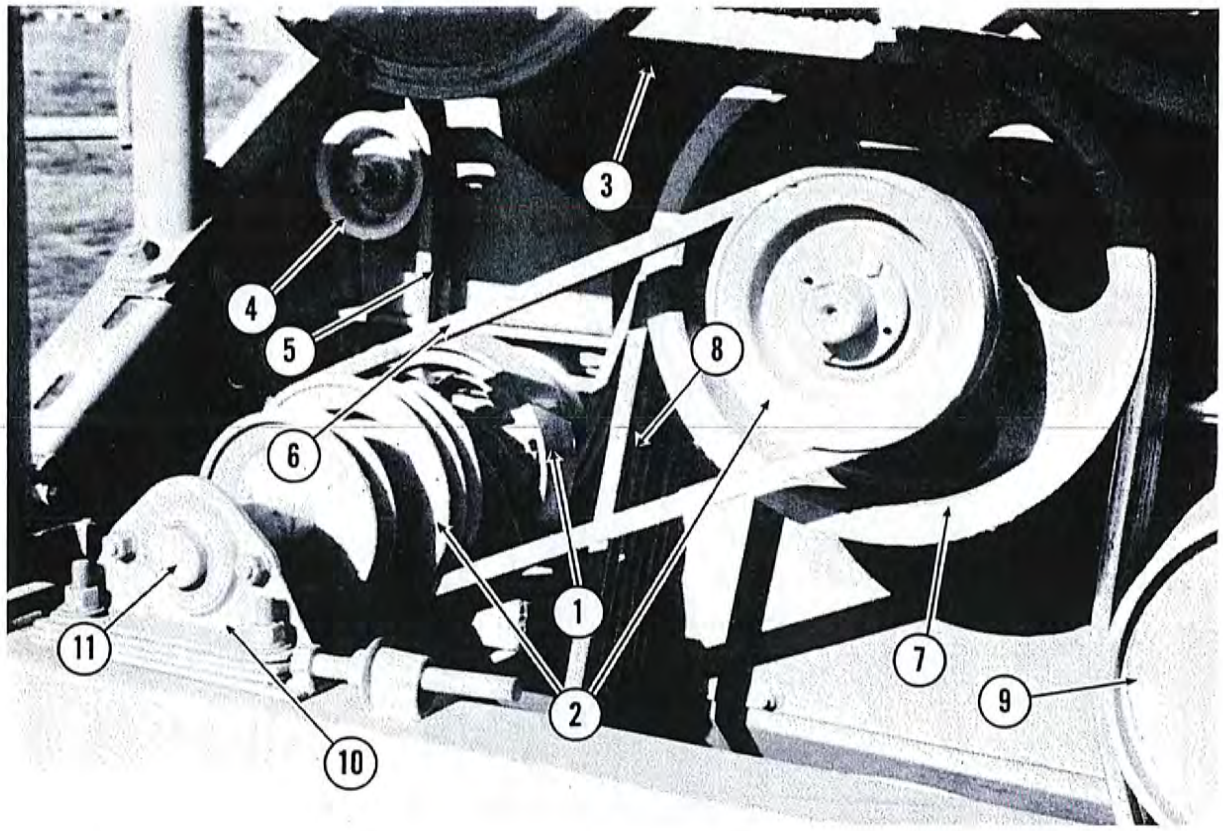

	Description	Part No.
1	1- Clutch (Color coded blue)	80-60-U-17-R
2	2- Cast iron Pulleys	35-5.0-2B-114
3	2- 12" Steel Pulleys	30-12B-114
4	1- 3" double flat idler	30-312-RBI
5	2- B56 belts	40-B-56
6	2- B42 belts	40-B-42
7	1- 11" Cast iron pulley (1000 RPM)	35-11-6B-2316
	1- 6" Cast iron pulley (540 RPM)	35-6-6B-2316
8	6- B90 belts (1000 RPM)	40-B-90
	6- B83 belts (540 RPM)	40-PGB-83
9	1- Back side idler	30-BSI-1 1/4" shaft
10	2- Pillow block bearings, 1 1/4" bore	50-PBPS-114
11	1- Clutch shaft	S-16-114-X5

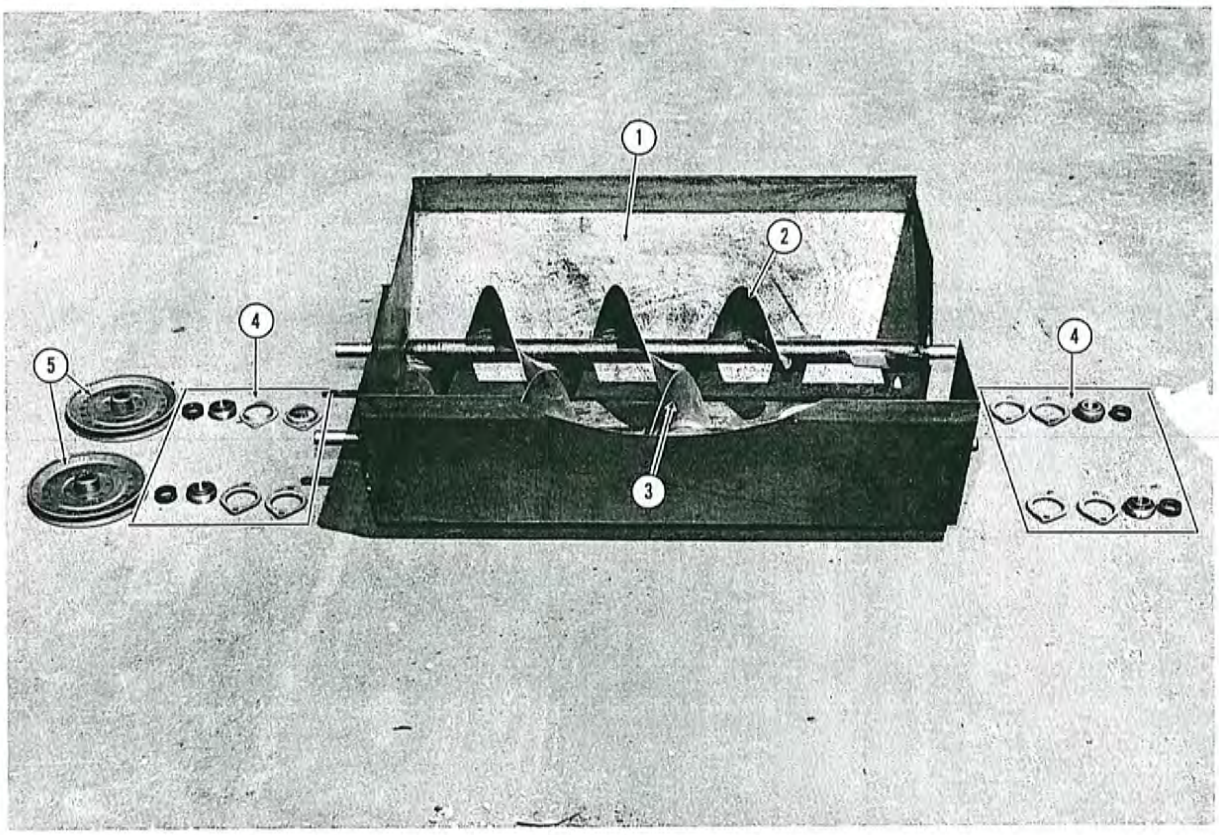

	Description	Part No.
1	Belly pan	J-100
2	Right hand auger	J-101
3	Left hand auger	J-102
4	4- 1" bearings, 4- lock collars 8- flanges	50-RAF-100
5	2- 8" cast pulleys	35-8.25-B-100

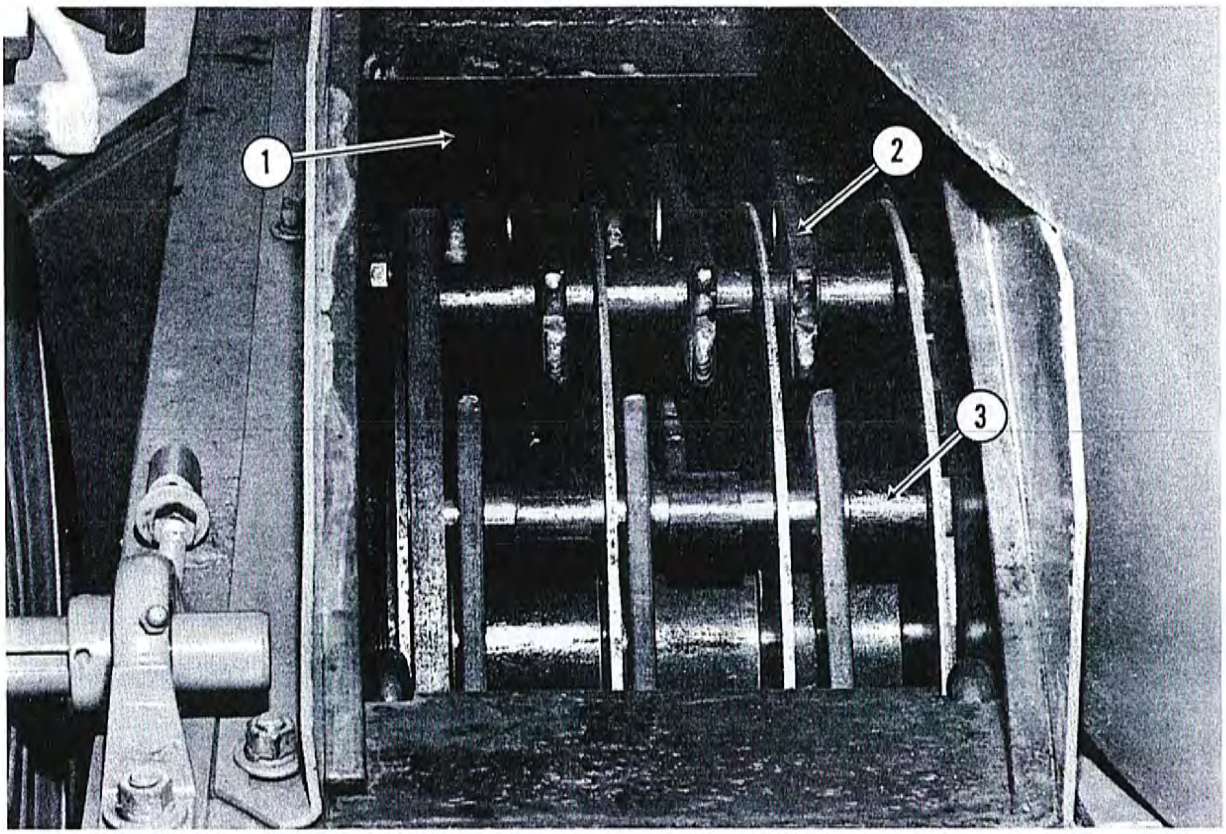

	Description	Part No.
1	2- Grain screens	J-130
2	24- Hammers	J-200
3	24- Spacers	J-202

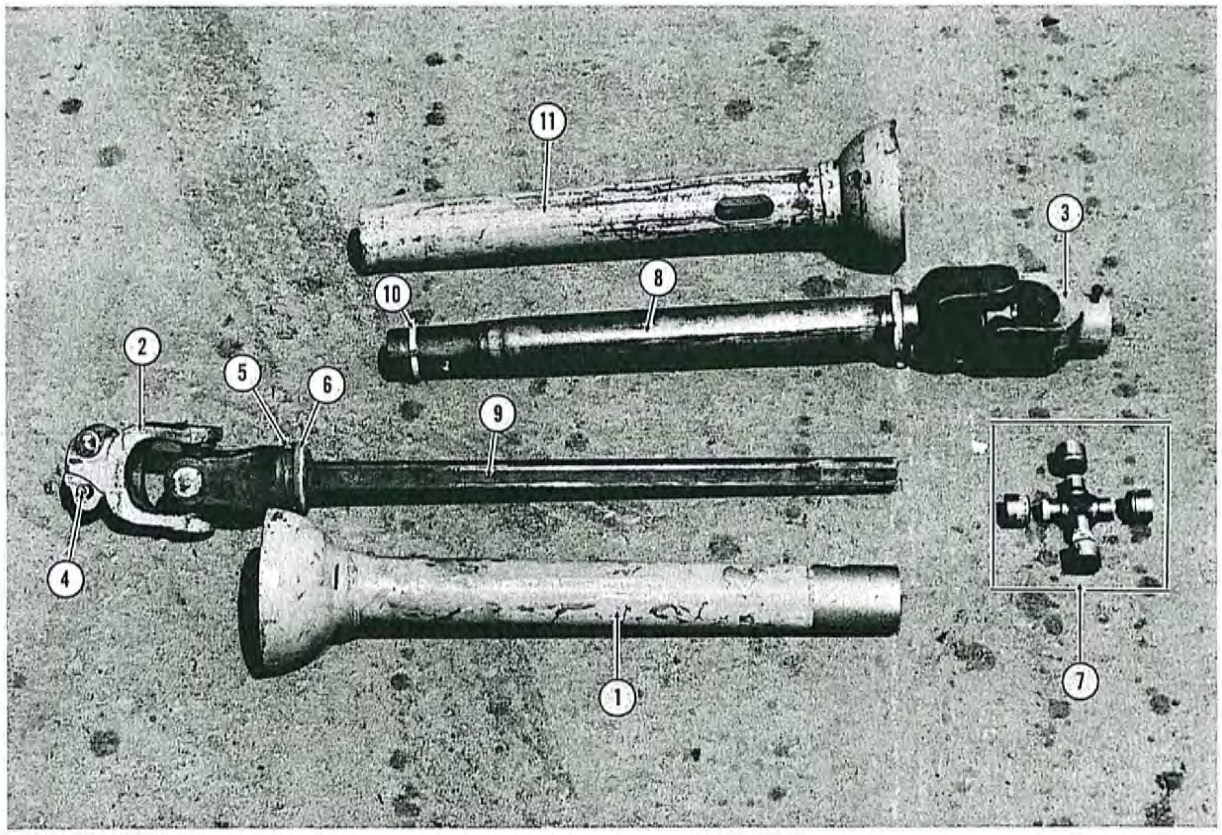

	Description	Part No.
1	1- Inside shield	PTOIS-100
2	1- Tractor Yoke with spline - 1000	PTY-440-21
	Tractor Yoke with spline - 540	PTY-440-6
3	1- Machine yoke	PMY-440
4	1- Lockpin & Spring	PLPS-440
5	1- Lock ring & washer	PLRW-440
6	2- Nylon bushings	PNB-442
7	1- Cross & bearing assembly	PCBA-440
8	1- Female tube with yoke	PFT-440
9	1- Male shaft with yoke	PMS-440
10	1- Nylon bushing	PNB-441
11	1- Outside shield	PTOOS-100

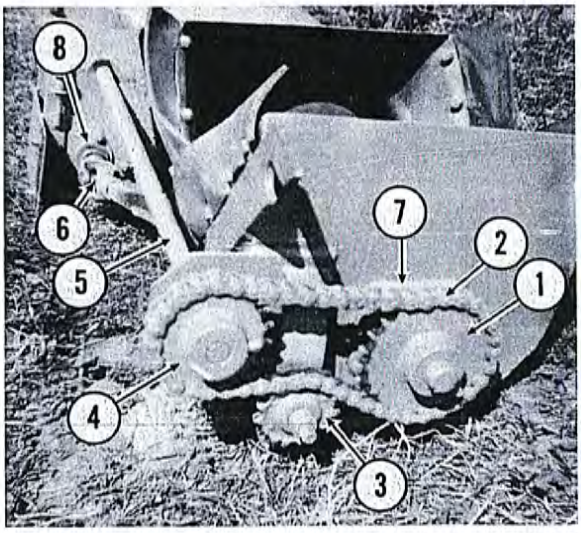

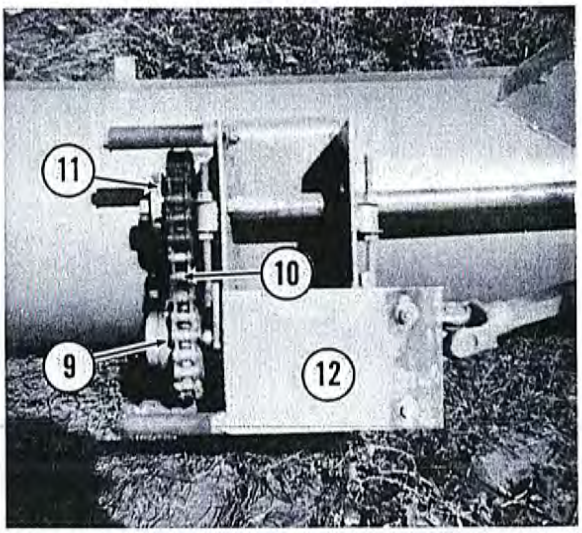

C10GA – AUGER

1	1- 60 pitch sprocket, 24 tooth, 1 1/4" bore.	10-60-24-114
2	1- 60 pitch chain	11-60-51-CL
3	1- 60 pitch idler sprocket	10-60-15-58I
4	1- 60 pitch sprocket, 20 tooth, 1" bore	10-60-20-100
5	1- Auger side shaft	S-41.5-100-X8
6	1- 1" round x 7/8" square U joint	80-UJ-100-78
7	1- 4 hole flange bearing, TCJ	50-4F-114-TCJ
8	1- 2 hole flangette bearing, 1" bore	50-2RAF-100
9	1- 60 pitch shear sprocket	10-60-18-100-SS
10	1- 60 pitch chain	11-60-31-CL
11	1- 60 pitch sprocket, 18 tooth	10-60-18-100
12	1- Auger shear clutch shaft (Not shown)	S-11.5-100-X9

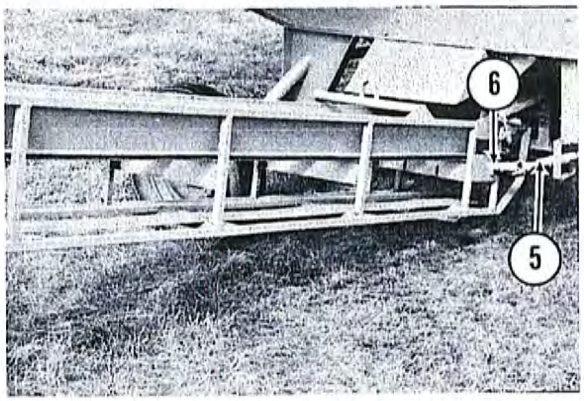

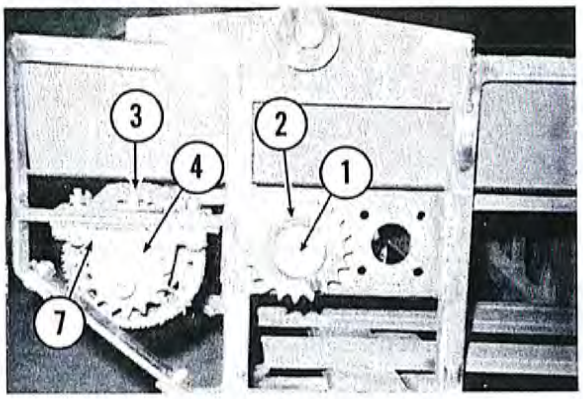

C10G – CONVEYOR

1	1- Conveyor idler shaft	S-24.5-100-X12
2	1- 50 Pitch sprocket, 20 tooth	10-50-20-100 (For corn)
3	1- Conveyor bottom roller	S-24-118-X11
4	1- 50 Pitch sprocket, 15 tooth	10-50-15-100 (For corn)
5	1- Conveyor sq. drive.	80-P.S.-200
6	2- 1" flangette bearing	50-2RAF-100
7	2- 1-1/8" Pillow block bearings	50-PB-118
8	1- Conveyor top roller (not shown)	S-22-118-X10
9	1- 50 Pitch chain (not shown)	11-50-37-OL-CL

Note: Sprocket No. 2 should be 15 tooth for hay
Sprocket No. 4 should be 20 tooth for hay

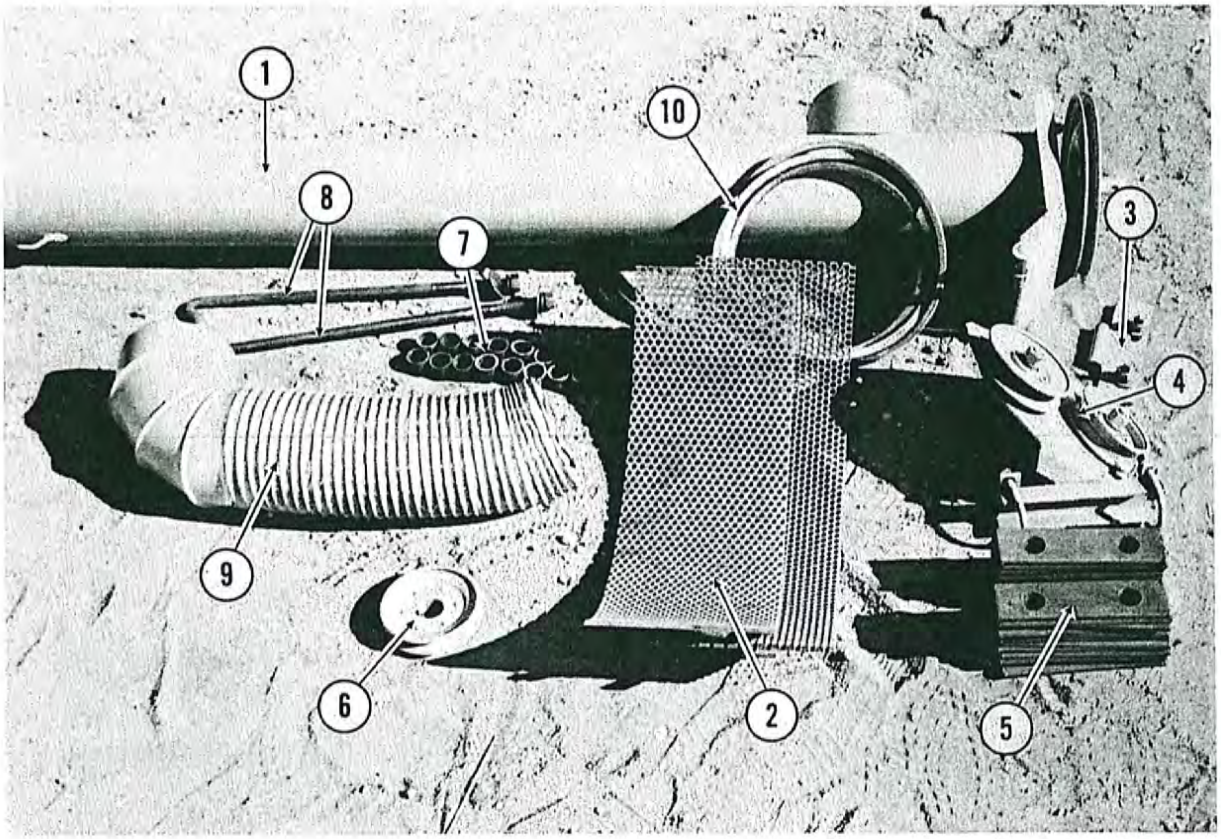

	Description	Part No.
1	1- Grain Auger	J-137
2	2- Screens	J-130
3	Auger Hanger	J-118
4	Belt Tightener	J-161
5	24- Hammers	J-201
6	1- 5'' Steel Pulley	30-5B-100
7	24- Spacers	J-206
8	2- Screen rods	J-133
9	1- Hose	J-162
10	1- B105 belt	40-B-105

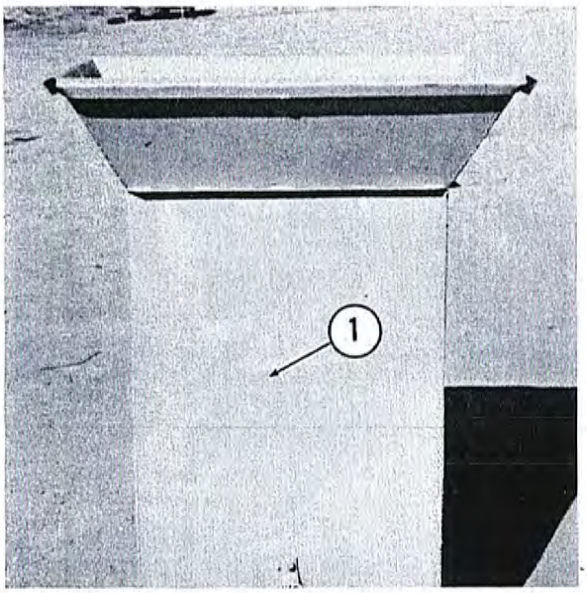

CORN AND GRAIN KIT – TUB STATIONARY

Description	Part No.
1 Hopper	J-300 (C10G & C10GA)
1 Hopper	J-301 (C-11)

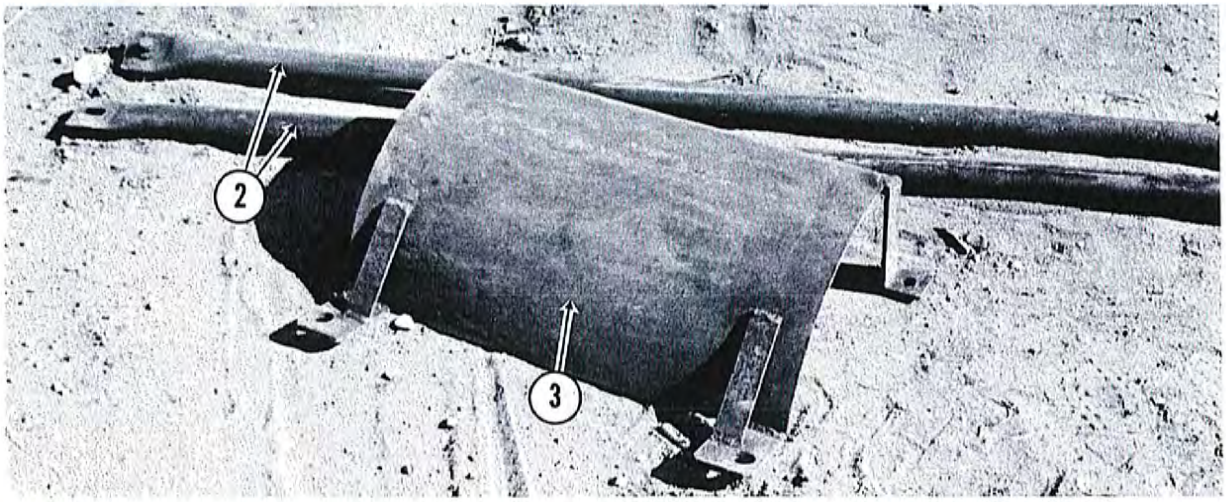

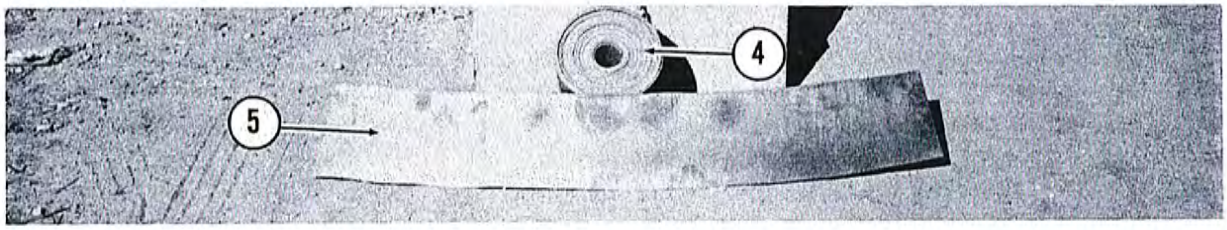

CORN KIT WITH TUB ROTATING

	Description	Part No.
2	2- 1 1/2" pipes	J-304 (C10G & C10GA) J-305 (C-11)
3	1- Cylinder Cover	J-302 (C10G & C10GA) J-303 (C-11)
4	1- 6" wide belt	J-308 (C10G & C10GA) J-309 (C-11)
5	5- segmented ring	J-306 (C10G & C10GA) J-307 (C-11)

HAYBUSTER C11 COMMERCIAL MODEL

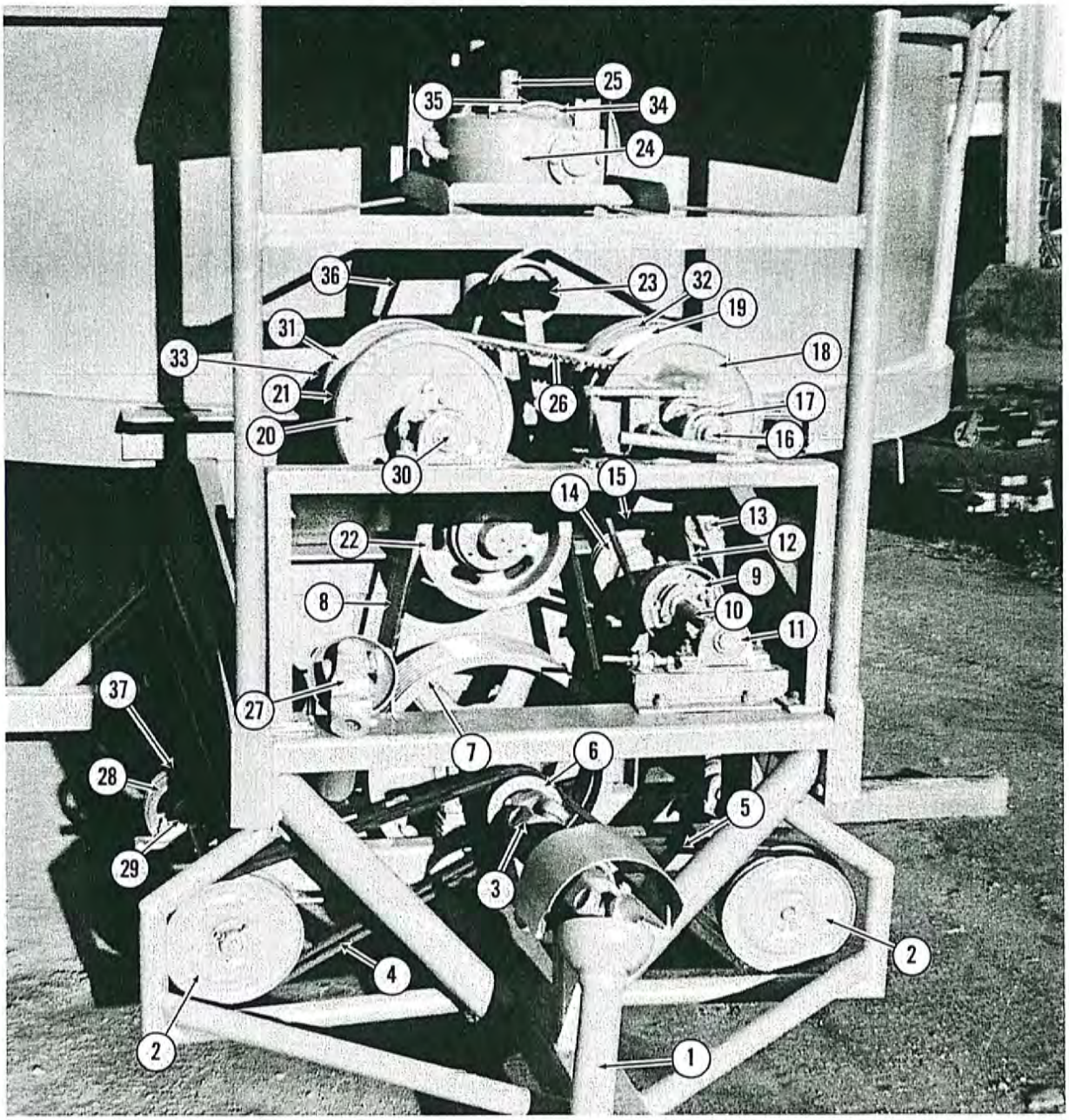

	Description	Part No.
1	1- Machine half, PTO	80-MH-100
2	4- 10" pressed steel pulleys, 1" bore	30-10B-100
3	1- 1 3/4" round x 1 3/4" round U joint	80-UJ-134
4	2- B66 belts	40-B-66
5	2- B68 belts (crossed)	40-B-68
6	1- 5" cast pulley, 4B groove	35-5-4B-134
7	1- 18.4" cast pulley, 8B groove	35-18.4-8B-200
8	8- B81 belts	40-B-81
9	1- clutch (color code green)	80-60-U-17-R
10	1- clutch shaft	S-23-114-Z9
11	2- 1 1/4" Pillow block bearings	50-PB-114
12	2- B55 belts	40-B-55
13	1- 3 1/2 Idler, RB7, 2 groove	30-312-2B-RBI
14	2- Cast pulley	35-7.4-2B-114
	NOT SHOWN	35-7.4-2B-2716
15	2- B49 belts	40-B-49
16	1- Left variable shaft	S-21-114-Z4
17	4- 1 1/4 P.B. bearings	50-PB-114
18	1- Front half, brg. loaded, movable plate	80-D-210

	Description	Part No.
19	1- Rear half, stationary plate	80-D-211
20	1- Front half spring loaded variable plate, stationary	80-RV-3166
21	1- Rear half, movable plate	80-RV-3108
22	1- 11" Cast pulley - 8 grooves	35-11-8B-2716
23	2- 4" flat idlers	30-4FI-58
24	1- G Box, 16:1 ratio	80-GB-W50B-16-1
25	1- shaft, tub gear box	S-26-114-Z6
26	1- Variable speed belt	40-VS-31
27	1- Tractor half, PTO	80-TH-101
28	2- 7" Cast pulleys, 2 B groove	35-7-2B-100
29	1" P.B. bearing	50-PB-100
30	1- Right side variable shaft	S-26-114-Z3
31	1- 12"steel pulley, 1 1/4" bore	30-12B-114
32	2- 12" steel pulley, 1 1/4" bore	30-12B-114
33	1- 7" steel pulley, 1 1/4" bore (not pictured)	30-7B-114
34	1- 12" steel pulley, 1" bore	30-12B-100
35	1- 7" steel pulley, 1" bore	30-7B-100
36	1- B68 belt	40-B-68
37	4- B46 belts	40-B-46

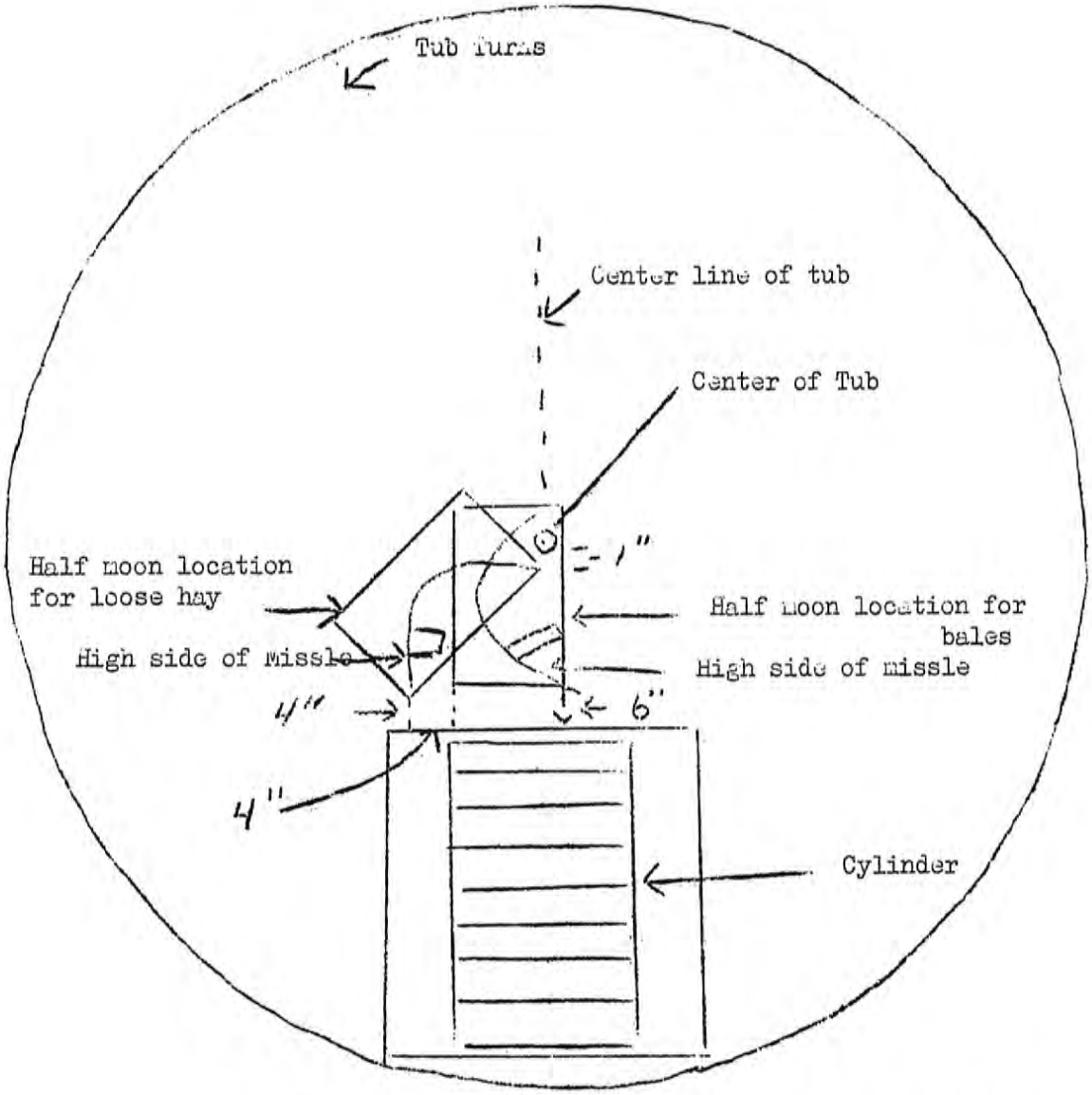

Location of the half moon missle on the tub floor for bales and for loose hay. Holes are pre punched in the floor for 1972 models.